CanadianSolar

INSTALLATION MANUAL OF PHOTOVOLTAIC MODULE

For professional use only

CONTENTS

1 GENERAL INFORMATION 1

1.1 INSTALLATION MANUAL DISCLAIMER 1

1.2 LIMITATION OF LIABILITY 1

2 SAFETY PRECAUTIONS 1

3 MECHANICAL / ELECTRICAL SPECIFICATIONS 3

4 UNPACKING AND STORAGE 4

5 MODULE INSTALLATION 6

5.1 MODULE WIRING 9

5.2 GROUNDING 11

6 MOUNTING INSTRUCTIONS 12

6.1 MOUNTING METHOD: BOLTING 14

6.2 MOUNTING METHOD: CLAMPING 17

6.3 INSERTION SYSTEM 27

6.4 MOUNTING METHOD： SINGLE-AXIS TRACKER 30

7 MAINTENANCE 32

8 MODULE CLEANING GUIDELINES 32

ANNEX A: GUIDANCE ON MODULE TEMPERATURE FOR SEVERAL LOCATIONS 34

ANNEX B: INSTALLATIONS USING MODULE LEVEL POWER ELECTRONICS 36

ANNEX C: COASTAL AREA ANTI-CORROSION INSTALLATION GUIDELINES 37

AMENDED EDITIONS AND DATES 41

1 GENERAL INFORMATION

This general manual provides important safety information relating to the installation, maintenance, and handling of Canadian Solar modules.

Professional installers must read these guidelines carefully and strictly follow these instructions. Failure to follow these instructions may result in death, injury, or property damage. The installation and handling of PV modules require professional skills and should only be performed by qualified professionals. Installers must inform end-users (consumers) of the aforesaid information accordingly.

The word “module” or “PV module” used in this manual refers to one or more Canadian Solar modules. This manual is valid for the solar modules listed in the table below. Please retain this manual for future reference. We recommend visiting www.csisolar.com regularly for the most updated version of this installation manual.

	Single glass	Double glass
Monofacial	CS6L-MS CS6R-MS CS6RA-MS CS6RB-MS CS6R-MS-HL CS6W-MS CS7L-MS CS7L-MS-R CS7N-MS CS6W-T CS6R-T	CS6R-H-AG CS6RA-H-AG CS6.1-72TD CS6.1-54TD
Bifacial	CS6R-MB-HL	CS6W-MB-AG CS7L-MB-AG CS7N-MB-AG CS7L-TB-AG CS7N-TB-AG CS6W-TB-AG CS6.1-72TB CS6.1-60TB

All above module types meet IEC1000V and IEC1500V in compliance with Australia CEC.

1.1 INSTALLATION MANUAL DISCLAIMER

The information contained in this manual is subject to change by Canadian Solar without prior notice. Canadian Solar gives no warranty of any kind whatsoever, either explicitly or implicitly, with respect to the information contained herein.

In the event of any inconsistency among different language versions of this document, the English version shall prevail. Please refer to our product lists and documents published on our website at www.csisolar.com as these lists are updated on a regular basis.

1.2 LIMITATION OF LIABILITY

Canadian Solar shall not be held responsible for damages of any kind, including – without limitation – bodily harm, injury, or property damage, in connection with handling PV modules, system installation, or compliance or non-compliance with the instructions set forth in this manual.

2 SAFETY PRECAUTIONS

WARNING

Before attempting to install, wire, operate, and/or service the module and other electrical equipment, all instructions should be read and understood. PV module connectors pass direct current (DC) when exposed to sunlight or other light sources. Contact with electrically active parts of the module, such as terminals, can result in injury or death, irrespective of whether or not the module and the other electrical equipment have been connected.

AVERTISSEMENT

Toutes les instructions devront être lues et comprises avant de procéder à l’installation, le câblage, l’exploitation et/ou l’entretien des panneaux.

Les interconnexions des panneaux conduisent du courant continu (CC) lorsque le panneau est exposé à la lumière du soleil ou à d’autres sources lumineuses. Tout contact avec des éléments sous tension du panneau tels que ses bornes de sortie peut entraîner des blessures ou la mort, que le panneau soit connecté ou non.

GENERAL SAFETY

All modules must be installed by licensed electricians in

accordance with the applicable electrical codes such as the latest National Electrical Code (USA) or Canadian Electric Code (Canada), or other national or international applicable electrical codes.

Protective clothing (non-slip gloves, clothes, etc.) must be worn during installation and maintenance to prevent direct contact with 30 V_{DC} or greater, and to protect hands from sharp edges. Do not touch any damaged area, such as burn marks, or anywhere with an exposed conductor to avoid the risk of electric shock.

Prior to installation, remove all metallic jewelry to prevent accidental exposure to live circuits.

When installing modules in light rain, or morning dew, take appropriate measures to prevent water ingress into the connector.

Do not allow children or unauthorized persons near the installation site or module storage area.

- Use electrically insulated tools to reduce the risk of electric shock.
- If the disconnects and over-current protection devices (OCPDs) cannot be opened or the inverter cannot be powered down, cover the fronts of the modules in the PV array with an opaque material to stop the production of electricity when installing or working on a module or wiring.
- Do not install modules in strong wind.
- Do not use or install broken modules.
- Do not contact the module surface if the front or rear glass is broken. This may cause electric shock.
- Do not attempt to repair any part of the module. The PV module does not contain any serviceable parts.
- Do not open the cover of the junction box at any time.
- Do not disassemble a module or remove any module part.
- Do not artificially concentrate sunlight on a module.
- Do not connect or disconnect modules when current from the modules or an external source is present.
- When the inverter gives a grounding alarm, please wear personal protective equipment first and make sure it is safe before disconnecting the inverter and the faulty modules. Do not touch any other parts of the module to avoid electric shock.

3 MECHANICAL / ELECTRICAL SPECIFICATIONS

Module electrical ratings are measured under Standard Test Conditions (STC) of 1000 W/m² irradiance, with an AM1.5 spectrum, and a cell temperature of 25°C. Detailed electrical and mechanical characteristics of Canadian Solar crystalline silicon PV modules can be found in datasheets and on www.csisolar.com. The main electrical characteristics at STC are also stated on each module label. Please refer to the datasheet or the product nameplate for the maximum system voltage.

Under certain conditions, a module may produce more current or voltage than its Standard Test Conditions rated power. As a result, electrical calculations and design must be performed by a qualified engineer or consultant.

A correction factor should be applied to the open-circuit voltage (see Table 1 below), when determining component ratings and capacities.

Table 1: Low-temperature correction factors for open-circuit voltage

Lowest Expected Ambient Temperature (°C/°F)	Correction Factor
24 to 20 / 76 to 68	1.02
19 to 15 / 67 to 59	1.04
14 to 10 / 58 to 50	1.06
9 to 5 / 49 to 41	1.08
4 to 0 / 40 to 32	1.10
-1 to -5 / 31 to 23	1.12
-6 to -10 / 22 to 14	1.14
-11 to -15 / 13 to 5	1.16
-16 to -20 / 4 to -4	1.18
-21 to -25 / -5 to -13	1.20
-26 to -30 / -14 to -22	1.21
-31 to -35 / -23 to -31	1.23
-36 to -40 / -32 to -40	1.25

Alternatively, the correction factor for the open-circuit voltage can be calculated using the following formula:

$$C_{Voc} = 1 - \alpha_{Voc} \times (25 - T)$$

T (°C) is the lowest expected ambient temperature at the system installation site.

α_{Voc} (%/°C) is the voltage temperature coefficient of the selected module (refer to the corresponding datasheet).

Please contact Canadian Solar's technical support team for a more accurate correction factor if necessary.

The module short-circuit current under STC should be multiplied by 1.25×1.25 (i.e., 1.56), when determining appropriate wire and fuse specifications. For bifacial modules, short-circuit current is related to specific installation conditions. It varies with different mounting heights and mounting surfaces with different reflectivity. Consequently short-circuit current of bifacial modules should be multiplied by 1.56 and then by 1.2. For bifacial modules mounted close to the roof surface, no significant bifacial gain can be obtained, and therefore, the 1.2 additional coefficient is not applicable and can be ignored. OCPD rating selection should be done per the following guidance, where the minimum OCPD rating possible is determined by calculating the expected maximum circuit current for the PV system, and the maximum OCPD rating constrained by the IEC 61215: 2016 and UL 61730 standard requirements for the certified PV modules.

For monofacial modules, the string fuse rating should not exceed the maximum sting fuse rating listed in the corresponding datasheet.

For bifacial modules, the following method can be applied to determine an appropriate rating (X):

Minimum string fuse rating < X ≤ Maximum string fuse rating.

The maximum string fuse ratings can be found in datasheets and nameplates for all the certified Canadian Solar module types.

The minimum string fuse rating for compliance with NEC: 2017 code and IEC 62548: 2016 requirement is suggested to be determined as follows:

Minimum string fuse rating = Isc_{STC} x 1.25 x Max (1.175, $Impp_{\alpha}$ ÷ $Impp_{STC}$).

$Impp_{\alpha}$ = the highest 3-hour current average resulting from the simulated local simultaneous irradiances on the front and rear sides of the PV array accounting for elevation and orientation.

Isc_{STC} = the listed short circuit current at 0% bifacial gain on the PV module datasheet or nameplate label.

$Impp_{STC}$ = the listed MPP operating current at 0% bifacial gain on the PV module datasheet or nameplate

label.

An assembly, together with its overcurrent device(s), that is listed for continuous operation at 100% of its rating shall be permitted to be used at 100% of its rating, and therefore shall not require the additional 1.25 multiplier.

Please contact Canadian Solar's technical support team for additional information pertaining to engineering optimization and approval of project specific module string lengths.

4 UNPACKING AND STORAGE

NOTICE

PRECAUTIONS

- Modules should be stored in a dry and ventilated environment to avoid direct sunlight and moisture. If modules are stored in an uncontrolled environment, the storage time should be less than 3 months and extra precautions should be taken to prevent connectors from being exposed to moisture or sunlight, like using connector endcaps. Protect the package from damage. In any circumstances, pallets with landscape-oriented module packaging shall not be stacked vertically more than two high; with the N-bracket wood bracing installed on the bottom pallet for CS6-series modules (marked with red lines in the following figure). And for pallets with portrait-oriented module packaging, stacking is not allowed.

When unloading module pallets from a flatbed truck, please use a crane or a forklift to remove the module pallets. When unloading module pallets from containers, please use a forklift to remove the module pallets from the container or trailer. Do not move any pallets within the container or trailer without properly lifting them first. The forklift should be close to the ground in order to avoid the top of module pallets from touching the top of the cabinet door. The thickness of forklift blades should be less than 80 mm when unloading the pallets. The length of the forklift blades should be longer than 2300 mm when unloading pallets of CS6W modules from the short side. For unloading pallets of CS7N and CS7L modules, the length of the forklift blades should be longer than 1250 mm and the distance between the forklift blades should be wider than 600 mm (from middle to middle of the forklift blades). Visit our website or consult your Canadian Solar representative for more detailed CS7N and CS7L unpacking instructions.

- Unpack module pallets carefully, following the steps shown on the pallet. Unpack, transport and store the modules with care.
- Modules must always be unpacked and installed by at least two people. Always use both hands when handling modules with gloves.

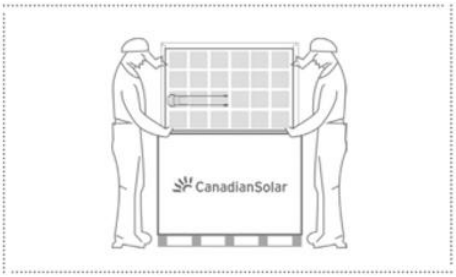

For modules vertically packed (CS7L and CS7N), please use an anti-tipping structure. Such structure can be built with the pallets own wooden beams (for pallets packed with wooden beams) or with an unpacking bracket, as shown in the picture below. It is recommended that one person is present to prevent the unpacked modules from falling during the unpacking process. Please carefully follow the applicable unpacking instructions, which can be found on our website at www.csisolar.com or via the QR codes.

Unpacking bracket

Wooden anti-tipping structure

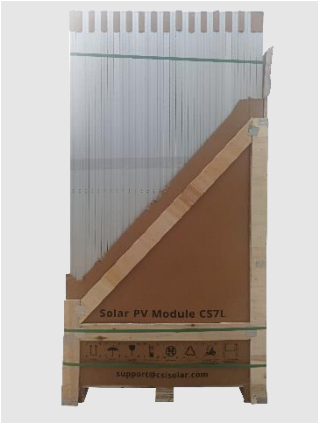

Unpacking instructions of pallet with steel bracket (PDF)

Unpacking instructions of pallet with steel bracket (Video)

Assembly Video of the unpacking bracket

Unpacking instructions of pallet with wooden beams (Video)

- During unpacking, the unpacked modules should be properly fixed. After unpacking, it is recommended to place the remaining uninstalled modules horizontally on a pallet. Stacking of modules should be limited to no more than 12 modules and frames should be aligned with one another on the pile. Visit our website or contact your Canadian Solar representative for more detailed unpacking requirements.

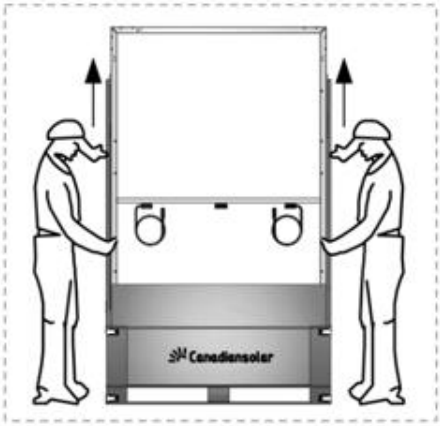

- Do not lift modules by their wires or junction box, lift them by the frame.
- Do not allow the modules to sag or bow due to external forces other than gravity when being carried.
- Do not place excessive loads on the module or twist the module.
- Do not carry modules on your head.
- Do not drop or place objects (such as tools) on the modules.
- Do not use sharp instruments on the modules. For single glass modules with polymer backsheets, particular care should be taken to avoid module backsheets being damaged by sharp objects, as scratches may directly affect product safety.
- Do not leave modules unsupported or unsecured.
- Do not support the module by its backsheet or back glass when carrying or mounting it.
- Do not stand, step, walk, and/or jump on modules under any circumstances. Localized heavy loads may cause severe micro-cracks at the cell level, which in turn may compromise module reliability and void Canadian Solar's warranty.

- Do not change the wiring of the bypass diodes.
- Keep all electrical contacts clean and dry at all times.
- Do not expose the modules and their electrical contacts (junction boxes, connectors) to any unauthorized chemical substance (e.g. oil, lubricant, pesticide, petrol, white flower oil, activating collaterals oil, mold temperature oil, machine oil (such as KV46), grease (such as Molykote EM-SOL, etc.), lubricating oil, anti-rust oil, stamping oil, butter， cooking oil, propyl alcohol, ethyl alcohol, essential oil, bone-setting water, Tianna water, mold release agent (such as Pelicoat S-6, etc.), glue and potting glue that can generate oxime gas (such as KE200, CX-200, Chemlok, etc.), TBP (plasticizer), cleaning agents, pesticide, paint strippers, adhesives, antirust agent, disincrustant, emulsifying agent, cutting oils and cosmetics, etc.) as modules may incur damages. Please contact your Canadian Solar representative for more detailed requirements.

PRODUCT IDENTIFICATION

Each module has identical barcodes (one in the laminate under the front glass, the other one on the frame) containing a unique 14 or 16-digit serial number that act as a unique identifier.

A nameplate is also affixed to the rear of each module. This nameplate specifies the model type, as well as the main electrical and safety characteristics of the module. It also includes the barcode with the module's unique serial number as mentioned above.

5 MODULE INSTALLATION

PRECAUTIONARY MEASURES AND GENERAL SAFETY

- Prior to installing modules, please obtain information about any requirements and necessary approvals for the site, installation, and inspection from the relevant authorities.
- Check applicable building codes to ensure that the construction or structure (roof, facade, support, etc.) can bear the module system load.
- Canadian solar modules have been qualified for Application Class A (equivalent to Safety Class II requirements). Modules rated under this class should be used in systems operating at voltage above 50V or power above 240W, where general contact access is anticipated.
- Canadian Solar double glass modules have been certified as Type 29 according to UL 61730 and as Class C according to IEC 61730-2 for fire performance. Single glass monofacial modules have been certified as Type 1 or Type 2 according to UL 61730 and Class C according to IEC 61730-2. Please refer to the datasheet or the product nameplate for the detailed types.
- Consult your local authority for guidelines and requirements for building or structural fire safety.

UL 61730 SYSTEM FIRE RATING REQUIREMENTS

- The fire rating of this module is only valid when the product is installed as specified in the mechanical mounting instructions.
- When installing the modules, ensure the assembly is mounted over a fire-resistant roof covering rated for the application.
- Photovoltaic systems composed of UL 61730 certified modules mounted on a UL 2703 certified mounting system should be evaluated in combination with roof coverings in accordance with UL 61730 standard, with respect to meeting the same fire classification as the roof assembly.
- Mounting systems with a System Fire Class Rating, tested in conjunction with 'type 1', 'type 2' or 'type 29' fire-rated modules, are considered acceptable for using with Canadian Solar modules, providing the mounting system does not violate any other requirements of this manual.
- Any mounting system limitations on inclination or accessories required to maintain a specific System Fire Class Rating should be clearly specified in the

installation instructions and UL 2703 certification of the mounting system supplier.

ENVIRONMENTAL CONDITIONS

- PV modules are intended for use in general open-air climates, as defined in IEC 60721-2-1: Classification of environmental conditions Part 2-1: Environmental conditions appearing in nature-Temperature and humidity.
- It is recommended that PV modules be installed in an environment with ambient temperature ranging from -40 °C to +40 °C. The 98th-percentile of the module operational temperature should be of 70 °C or lower under any mounting conditions. If the application where the 98th-percentile of the module operational temperature of 80 °C is needed, please request IEC 63126 Level 1 module types.
- This environmental temperature range encompasses many locations and installation methods. Annex A provides the reader with modeled PV module temperature examples, at the 98th-percentile depending on the different worldwide locations.
- Please consult the Canadian Solar technical support department for more information on the use of modules in special climates, such as an altitude greater than 2000 m, heavy snow, severe hailstorm, hurricane, etc.
- Do not install modules near open flames or flammable materials.
- Do not immerse modules in water or constantly expose modules to water (either fresh or salt, e.g. from fountains, sea spray).
- Exposing modules to salt (i.e. marine environments) or sulfur (i.e. sulfur sources, volcanoes) incurs the risk of module corrosion.
- Do not expose modules and their connectors to any unauthorized chemical substances (e.g. oil, lubricant, pesticide, etc.), as modules may incur damages.
- Canadian solar modules have passed the salt mist corrosion resistance test according to IEC 61701, but the corrosion may still occur where the modules frame is connected to the bracket or where the grounding is connected. Should the installation location be near the ocean, Canadian solar recommends stainless steel or aluminum materials be used in the areas with direct contact with the PV modules, and the connection point should be protected with anti-corrosion measures. For more information, please contact Canadian solar technical support team.

INSTALLATION REQUIREMENTS

- Ensure that the module meets the general technical system requirements.
- Ensure that other systems components do not damage the module mechanically or electrically.
- Modules can be wired in series to increase voltage or in parallel to increase current. To connect modules in series, connect the cables from the positive terminal of one module to the negative terminal of the next module. To connect in parallel, connect the cables from the positive terminal of one module to the positive terminal of the next module.
- The quantity of bypass diodes in the module junction box provided may vary depending on the model series.
- Only connect the quantity of modules that corresponds to the voltage specifications of the inverters used in the system. In addition, modules must not be connected together to create a voltage higher than the maximum permitted system voltage stated on the module nameplate, even under the worst local temperature conditions (see Table 1 for the correction coefficients that apply to open-circuit voltage).
- A maximum of two strings can be connected in parallel without using an over-current protection device (fuses, etc.) incorporated in series within each string. Three or more strings can be connected in parallel if an appropriate and certified over-current protection device is installed in series within each string. And it shall be ensured in the PV system design that the reverse current of any particular string is lower than the module maximum fuse rating under any circumstances.
- Only modules with similar electrical parameters should be connected in the same string to avoid or minimize

mismatch effects in arrays.

- To minimize risk in the event of an indirect lightning strike, avoid forming loops with the wiring when designing the system.
- Modules should be safely fixed to bear all expected loads, including wind and snow loads.
- A minimum clearance of 6.5 mm (0.25 in) between modules is required to allow thermal expansion of the frames and modules.
- The drain holes should not be blocked.

OPTIMUM ORIENTATION AND TILT

- To maximize the annual yield, please calculate the optimum orientation and tilt for PV modules in that specific installation site. The highest yields are achieved when sunlight shines perpendicularly onto the PV modules.

AVOID SHADING

- Modules shall not be permanently shaded (including partial shading, spot shading, even shading or uneven shading) under any circumstances. Permanent shading means cells are continuously shaded for extended periods of time, such as installing modules behind a pipe or a chimney, etc. If a defect (such as a hot spot) is caused due to a panel being improperly installed in the shade or due to poor maintenance, it will void Canadian Solar's warranty. Power dissipated in fully or partially shaded cells will result in power loss, reduced yield and can cause localized overheating, which in turn may negatively impact the module service lifetime. Permanent shading may cause accelerated ageing of the encapsulation material and place thermal stress on the bypass diodes. This would void the module's warranty unless properly mitigated through the use of Module Level Power Electronic (MLPE) devices.

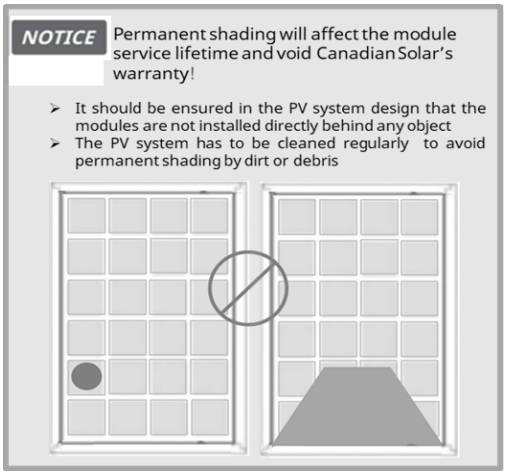

- Regular maintenance is required to keep modules clean. Particular measures should be taken to avoid permanent shading from dirt or debris (e.g., plants, bird droppings, etc.).
- Do not install modules directly behind any object (e.g., tree, antenna, etc.) to prevent occurrence of permanent shading.
- Even temporary partial shading will reduce the energy yield. A module can be considered to be unshaded if its entire surface is free from shading all year round, including on the shortest day of the year.

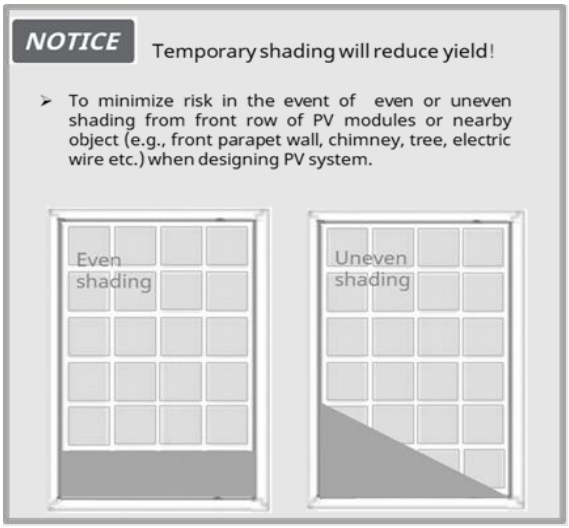

- For optimizing the power generation of the rear side of bifacial modules, obstacles between modules and the mounting ground should be avoided as much as possible.

RELIABLE VENTILATION

- Bifacial modules use direct, reflected, or diffuse

sunlight on the backside to generate additional power. Therefore, bifacial modules are not suggested to be used in building attached photovoltaic systems (BAPV).

- Sufficient clearance of at least 10.2 cm (4.0 in) between the module bottom side and the surface of roof or wall needs to be provided to allow cooling air to circulate around the back of the module. This also allows condensation or moisture to dissipate. In particular, the minimum clearance of any modules applied in BWh area (please refer to Annex A Figure A.2) should be determined by Canadian Solar's technical service team.
- According to UL 61730, any other specific clearance required for maintaining a system fire rating should prevail. Detailed clearance requirements pertaining to system fire ratings must be provided by your racking supplier.

5.1 MODULE WIRING

CORRECT WIRING SCHEME

- Cable management scheme should be reviewed and approved by the EPC contractor. Required cable lengths should be cross-checked and account for tracker structure particularities e.g. bearing house gaps. If longer cables or additional jumper cables are required, please contact Canadian Solar's sales representative in advance.
- Ensure that the wiring is correct before starting up the system. If the measured open circuit voltage (Voc) and short-circuit current (Isc) differ from the specifications, this indicates that there is a wiring fault.
- When modules have been installed, but the system has not been connected to the grid yet, each module string should be kept under open-circuit conditions and proper actions should be taken to avoid dust and moisture penetration inside the connectors.
- For double glass modules, Canadian Solar offers several cable length options to match various system configurations, in case a jumper cable is needed, please contact your Canadian Solar sales representative.
- Cables should always be fastened on module frames or mounting rails, in order to avoid shading on the rear side of bifacial modules.
- The cable lengths assume the purlin connecting the modules to be no more than 80 mm protruding from the back side of the module and the distance between two modules to be no more than 25 mm. Verify proper wire management with mounting supplier should your configuration differ.
- For different module types, recommended system cable schemes are shown in table 2 below. On the below figures, bold lines represent cable installation pathways, while + and - connector correspond to positive and negative module terminals respectively.

Table 2: System Cable Scheme for CS6L, CS6W, CS6R, CS6RA, CS7N and CS7L modules

Module types	Recommended wiring configurations
CS6L-MS CS6R-MS CS6R-MS-HL CS6R-MB-HL CS6W-MS CS7N-MS CS7L-MS CS7L-MS-R CS6W-T CS6R-T CS6R-H-AG CS6RA-H-AG CS6W-MB-AG CS7N-MB-AG CS7L-MB-AG CS6W-TB-AG CS7N-TB-AG CS7L-TB-AG	**Landscape installation two rows:** 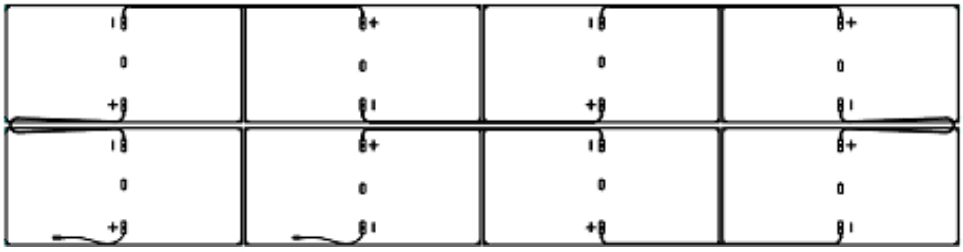 Note: Adjacent modules in the same row need to be rotated 180 degrees for proper installation.
	Portrait installation one row: 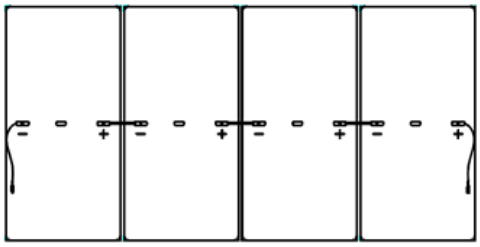
	Portrait installation two rows: 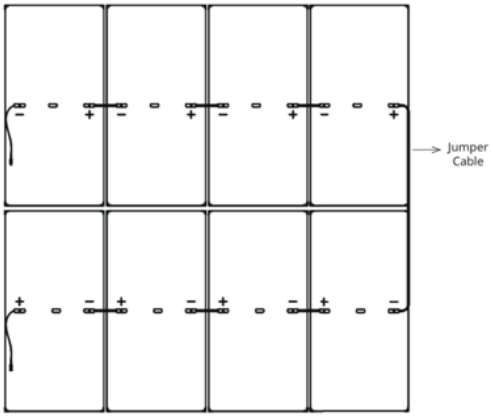 Note: Modules in adjacent rows need to be rotated 180 degrees for proper installation.
CS6W-MB-AG CS6W-TB-AG	**Portrait installation one row Leap-frog** (for single-axis tracker): 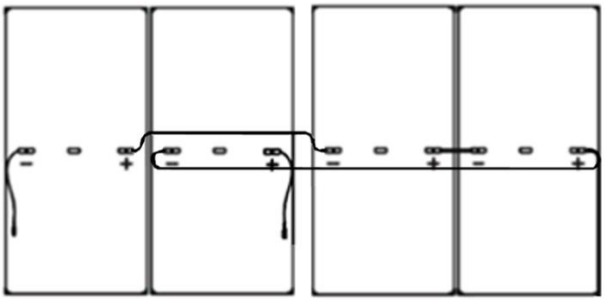

The maximum distance between two adjacent module frames should be within 50 mm (1.96 in) for the side with mounting clamps, and within 25 mm (0.98in) for the side without mounting clamps, in order to meet the system cable scheme.

CORRECT CONNECTION OF CONNECTORS

- Make sure that all connections are safe and properly mated. The PV connector should not be subject to stress from the exterior. Connectors should only be used to connect the circuit. They should never be used to turn the circuit on and off.
- Connectors are not waterproof when unmated. When installing modules, connectors should be connected to each other as soon as possible or appropriate measures (like using connector endcaps) should be taken to avoid moisture and dust penetrating into the connector.
- If end caps are present on un-mated connectors, carefully remove by hand the end caps before connecting the connectors. Do not use any sharp tool which may damage the connector. The use of tools is not needed.

Positive connector endcap

Negative connector endcap

- Do not connect different connectors (brand and model) together.
- Do not clean or precondition the connectors using lubricants or any unauthorized chemical substances.

USE OF SUITABLE MATERIALS

- Only use dedicated solar cable and suitable connectors (wiring should be sheathed in a sunlight-resistant conduit or, if exposed, should itself be sunlight-resistant) that meet local fire, building and electrical regulations. Please ensure that all wiring is in perfect electrical and mechanical condition.
- Installers may only use single-conductor cable listed and labeled as PV wire which is 90°C wet rated in North America, and single conductor cable with a cross section area of at least 4 mm² (12 AWG), 90°C wet rated in other areas (i.e. IEC 62930: 2017 approved), with proper insulation which is able to withstand the maximum possible system open-circuit voltage.
- Only copper conductor material should be used. Select a suitable conductor gauge to minimize voltage drop and ensure that the conductor ampacity complies with local regulations (e.g. NEC 690.8(D)).

CABLE AND CONNECTOR PROTECTION

- Secure the cables to the mounting system using UV-resistant cable ties. Protect exposed cables from damage by taking appropriate precautions (e.g. placing them inside a metallic raceway like EMT conduit). Avoid exposure to direct sunlight.
- A minimum bending radius of 60 mm (2.36 in) is required when securing the junction box cables to the racking system.
- Protect exposed connectors from weathering damage by taking appropriate precautions. Avoid exposure to direct sunlight.
- Do not place connectors in locations where water could easily accumulate.
- Canadian Solar uses ribbons to fix cables. End cutting pliers or a similar tool is recommended for cutting the ribbons to avoid any damage to cables.

End cutting pliers image

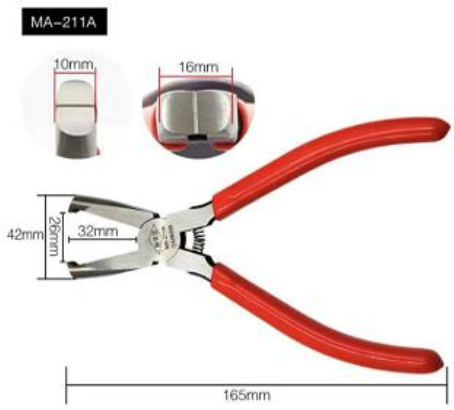

5.2 GROUNDING

- For grounding requirements in North America, a module with exposed conductive parts is considered to comply with UL 61730 only when it is electrically grounded in accordance with both the instructions presented below and the requirements of the National Electrical Code. Any grounding means used with Canadian Solar modules should be NRTL certified to UL

467 and UL 2703 standards. Please consult our technical service team for the formal approval process.

- For grounding requirements in other areas, although the modules are certified to Safety Class II, we recommend them to be grounded and that module installation should comply with all applicable local electrical codes and regulations. Minimum size of equipment grounding conductors for ground raceway and equipment from NEC 690.8(D) should be considered. Grounding connections should be installed by a qualified electrician. Connect module frames together using adequate grounding cables: we recommend using 4-14 mm² (AWG 6-12) copper wire. Holes provided for this purpose are identified with a grounding symbol ⏚ (IEC 61730-1). All conductive connection junctions must be firmly fixed.
- Do not drill any extra ground holes for convenience as this will void the module's warranty.
- All bolts, nuts, flat washers, lock washers and other relevant hardware should be made of stainless steel, unless otherwise specified.
- Canadian Solar does not provide grounding hardware.
- Canadian Solar material selection substantially limits potential induced degradation (PID) .Should further PID suppression be desired for the project, negative grounding is still an optional measure for PID mitigation and for optimal performance.
- The grounding method described below is recommended for Canadian Solar.

GROUNDING METHOD: BOLT + TOOTHED NUT + CUP WASHER.

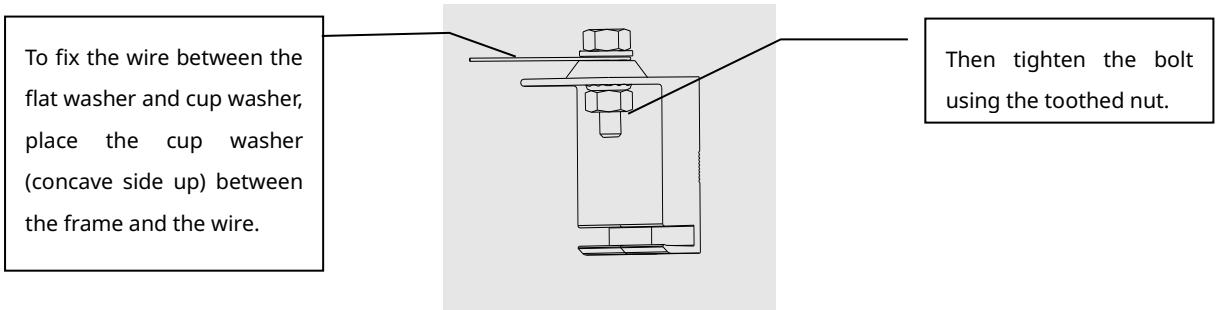

- A grounding kit containing an M5 (3/16") SS cap bolt, an M5 (3/16") SS flat washer, an M5 (3/16") SS cup washer, and an M5 (3/16") SS nut (with teeth) is used to attach copper grounding wire to a pre-drilled grounding hole on the frame (see image above).
- Place the wire between the flat washer and the cup washer. Ensure that the cup washer is positioned between the frame and the wire with the concave side up to prevent galvanic corrosion. Tighten the bolt securely using the SS toothed nut. A wrench may be used to do this. The tightening torque is 3-7 Nm (2.2-5.2 ft-lbs).
- For bifacial modules, mounting rail designs should be such to allow easy access to the grounding holes located on the long side of the frame, in order to enable the equipment grounding function when required.

6 MOUNTING INSTRUCTIONS

The applicable regulations pertaining to work safety, accident prevention and securing the construction site must be observed. Workers and third-party personnel shall wear or install fall arrest equipment. Any third party need to be protected against injuries and damages.

- The mounting design must be certified by a registered professional engineer. The mounting design and procedures must comply with all applicable local codes and requirements from all relevant authorities.
- The module is considered to be in compliance with UL 61730 and IEC 61215/61730 only when the module is mounted in the manner specified by the mounting instructions included in this installation manual or when specially approved by Canadian Solar in writing.

- The system designer and installer are responsible for load calculations and for proper design of support structure.
- The mechanical load tests in this manual are only valid when coupled to mounting and support structures that are capable of withstanding equal or greater mechanical loads. The mounting system supplier is responsible for the strength and stability of the mounting structure, which must meet the requirements of the relevant design specifications.
- The loads described in this manual correspond to test loads. For installations complying with UL 61730 and IEC 61215/61730, a safety factor of 1.5 should be applied for calculating the equivalent maximum authorized design loads. Project design loads depend on construction, applicable standards, location and local climate. Determination of the design loads is the responsibility of the racking suppliers and/or professional engineers. For detailed information, please follow local structural code or contact your professional structural engineer.

$$\text{Test load} = 1.5\ (\text{Safety factor}) \times \text{Design load}$$

- Use a torque wrench for installation.
- Do not drill additional holes or modify the module frame. Doing so will void the module's warranty.
- This manual includes preliminary loading capability data which might be subject to change in the coming versions. Please check for the latest version of this manual.
- Use appropriate corrosion-proof fastening materials. All mounting hardware (bolts, spring washers, flat washers, nuts) should be hot dip galvanized or stainless steel.
- Install and tighten the module clamps to the mounting rails using the torque stated by the mounting hardware manufacturer. Recommended accessories are shown below.

Accessory	Model	
Bolt	M8 x 1.25-Grade 8.8 (5/16"-18 Grade B7) galvanized or A2-70 stainless steel coarse thread bolts.	M6 X 1 (1/4") coarse thread bolts
Washer	2 pcs, thickness ≥1.5mm and outside diameters = 16mm	2 pcs, thickness ≥1.5mm and outside diameters = 12-16mm
Spring washer	8	6
Nut	M8	M6

Note that: 1) M8 and M6 bolt tightening torques must be within 16~20 Nm (11.8~14.75 ft-lbs) and 6~9 Nm (4.5~6.6 ft-lbs), respectively, depending on bolt classes. For the bolt grade, the technical guidelines from the fastener suppliers should be followed. Different recommendations from specific clamping hardware suppliers should prevail. 2) The yield strength of the bolt and nut should not be less than 450 MPa.

Bolt locations on the module, where M6 bolts are used only in single-axis tracker

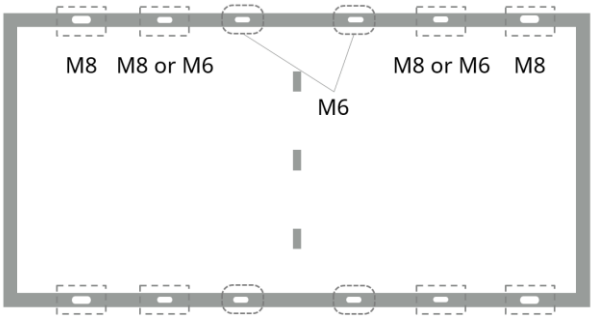

- The laminate of the PV modules will sink downward to varying degrees due to gravity, with the center of module being the maximum deflection position. While using bolting or clamping mounting method or insertion system, the maximum allowable deflection (ΔL shown in the picture below) is 20 mm (in the absence of external forces caused by, for example, wind and snow). Note that applying pressure to the module surface during storage, transportation and installation

will lead to more severe deflection.

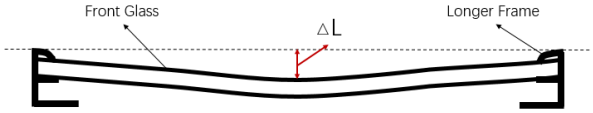

6.1 MOUNTING METHOD: BOLTING

- The mechanical load test with these mounting methods were performed according to IEC 61215.
- Modules should be bolted to supporting structures through the mounting holes in the rear frame flanges only.
- Each module must be securely fastened at a minimum of 4 points on two opposite sides.

NOTICE Suitable bolt length should be chosen based on actual module frame height. For double glass module with 30 mm frame height, our recommended maximum bolt length is 20 mm in order to properly insert the bolts through the mounting hole. The system designer is responsible to check that the racking supplier specified bolt length complies with above requirement and will not affect installation.

- In areas with heavy wind loads, additional mounting points should be used. The system designer and the installer are responsible for correctly calculating the loads and ensuring that the supporting structure meets all the applicable requirements.

Mounting method: Bolting

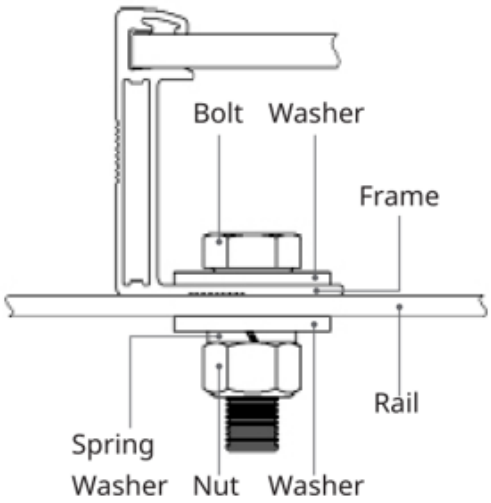

- Modules should be bolted at the following hole locations depending on the configuration and loads, which is shown in table 3.

Table 3: Approved bolting methods

Inner four holes installation method I-A	Middle four holes installation method M-A	Outer four holes installation method O-A
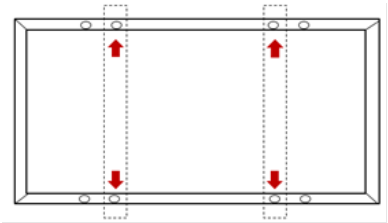	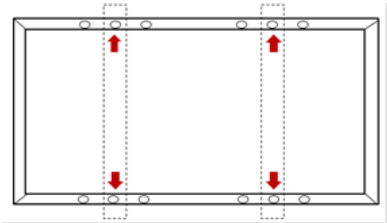	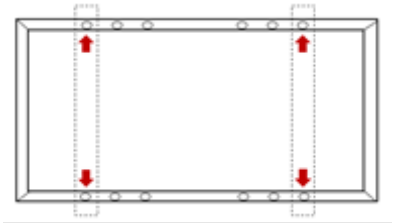
Inner four holes installation method I-B	**Middle four holes installation method M-B**	**Outer four holes installation method O-B**
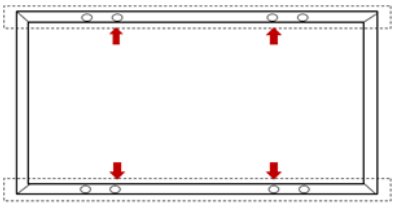	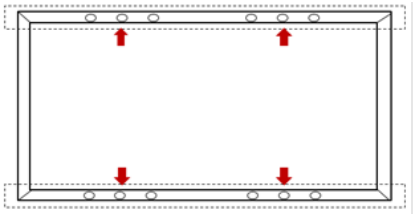	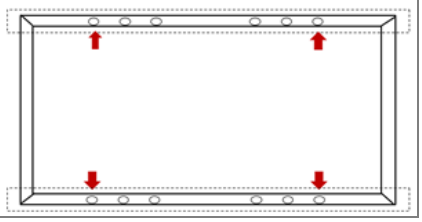

Installation Method / Module Types	I-A	I-B	M-A	M-B	O-A	O-B
CS6L-MS CS6R-MS / CS6RA-MS / CS6RB-MS	+5400Pa/ -2400Pa	/	/	/	/	/
CS6R-MS-HL*/CS6R-MB-HL	+5400Pa/ -3200Pa	+5400Pa/ -3200Pa	/	/	/	/
CS6W-MS/ CS6W-MB-AG CS7L-MS (F53A[2] & F56[3] Frame) CS7N-MS (F53A[2] & F56[3] Frame) CS6W-T/ CS6W-TB-AG CS6.1-72TB/ CS6.1-72TD CS6.1-60TB (Preliminary) CS6.1-54TD (Preliminary)	/	/	/	/	+5400Pa/ -2400Pa	/
CS7N-MS (F63[2] Frame) CS7L-MS (F63[2] Frame)	/	/	/	/	+5400Pa/ -2400Pa	+2400Pa/ -2400Pa
CS6R-T	+5400Pa/ -2400Pa	+4000Pa/ -2400Pa	/	/	/	/
CS7N-MB-AG (F43[2] Frame) CS7L-MB-AG (F43[2] Frame)	/	/	/	/	+5400Pa/ -2400Pa	+3600Pa/ -2400Pa
CS7N-MB-AG (F46[3] Frame) CS7L-MB-AG (F46[3] Frame) CS7N-TB-AG / CS7L-TB-AG	/	/	/	/	+5400Pa/ -2400Pa	+2800Pa/ -2400Pa
CS6R-H-AG/ CS6RA-H-AG	+5400Pa/ -2400Pa	+3600Pa/ -2400Pa	/	/	/	/

Note: The installation method of bolt is based on the experimental results, "/" means not tested. Loads in the table are test loads, please refer to section 6.*: D-type washer (as shown on the right) with outer diameter 23mm should be used when uplift load 4000 Pa is required;

[2]: with 35mm height frame;

[3]: with 33mm height frame.

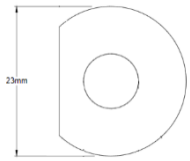

6.2 MOUNTING METHOD: CLAMPING

- The mechanical load test with these mounting methods were performed according to IEC 61215.
- Clamping methods will vary and are dependent on the mounting structures. Please follow the mounting guidelines recommended by the mounting system supplier.
- Each module must be securely fastened at a minimum of four points on two opposite sides. The clamps should be positioned symmetrically. The clamps should be positioned according to the authorized position ranges defined in the tables below. Install and tighten the module clamps to the mounting rails using the torque stated by the mounting hardware manufacturer.
- The system designer and the installer are responsible for load calculations and for proper design of support structure.
- For bifacial modules, the mounting rails shall be designed to limit as much as possible the shade on module rear side cells.
- Canadian Solar's warranty may be voided in the cases where improper clamps (For example, the clamp height does not match with the frame height) or unsuitable installation methods are found. When installing inter-modules or end-type clamps, please take the following measures into account:

  1. Do not bend the module frame.
  2. Do not touch or cast shadows on the front glass.
  3. Do not damage the surface of the frame (to the exception of the clamps with bonding pins).
  4. Ensure the clamps overlap the module frame as specified in table 4. For configurations where the mounting rails run parallel to the frame, precautions should be taken to ensure the bottom flange of the module frame overlaps the rail as specified in table 4 as well.

Clamps of modules with aluminum frame

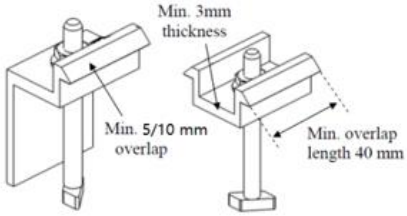

Clamps assembly diagram

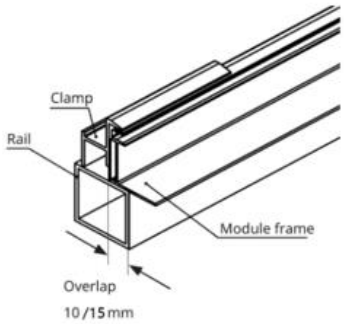

  5. Ensure the clamp thickness is at least 3 mm (0.12 in).

- Clamp material should be anodized aluminum alloy or stainless steel.
- Clamp positions are of crucial importance for the reliability of the installation. The clamp centerlines must only be positioned within the ranges indicated in the tables below, depending on the configuration and load.

Table 4: Overlap depth and length in clamp mounting method

Overlap between	Dimension type	Minimum overlap dimension	Applies to
Module frame and clamp	Depth	10 mm (0.4 in)	CS6W, CS6.1-72TB, CS6.1-72TD, CS7L and CS7N types
		5 mm (0.2 in)	Other module types
	Length	80 mm (3.15 in)	Uplift load > 2400 Pa
		40 mm (1.57 in)	Uplift load ≤ 2400 Pa
Module frame bottom flange and mounting rail	Depth	15 mm (0.59 in)	CS6W, CS6.1-72TB, CS6.1-72TD, CS7L, and CS7N types
		10 mm (0.4 in)	Other double glass modules
		15 mm (0.59 in)	All single glass modules

 Copyright © October, 2023. CSI Solar Co., Ltd.

6.2.1 Clamp mounting on long side of frame and rails perpendicular to the long side frame

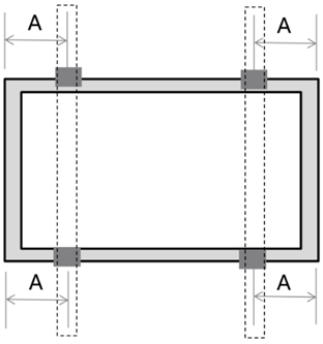

Module Types	Max Mechanical Load (Pa)*						
	+1800/ -1800	+2000/ -2000	+2400/ -2400	+3600/ -2400	+5400/ -2400	+5400/ -3600	+7000/ -5000
	A Range (mm)						
CS6L-MS	60-200◊	/	/	300-600	400-500	/	/
CS6R-MS / CS6RB-MS	/	20-100	100-600	200-500	300-400	/	/
CS6RA-MS	/	/	/	20-100	200-400	/	/
CS6R-MS-HL / CS6R-MB-HL	/	/	0-100	100-600	250-550	/	400-500
CS6W-MS (F35A [1] Frame)/ CS7L-MS	/	/	300-600	/	400-500	/	/
CS6W-MS (F45 [1] Frame)/ CS6W-T/ CS7N-MS (F53A [2] &F56 [3] Frame)	/	/	300-600	/	450-550	/	/
CS7N-MS (F63 [2] Frame)	/	/	/	300-600	450-550 [4]	/	/
CS7L-MS (F63 [2] Frame)	/	/	/	300-600	400-500	/	/
CS6R-T	/	20-100	100-600	200-500	300-400	/	/
CS6W-MB-AG CS6W-TB-AG	/	/	/	300-600	400-500	/	/
CS6.1-72TB/ CS6.1-72TD CS7N-MB-AG CS7N-TB-AG	/	/	/	/	450-550	/	/
CS7L-MB-AG CS7L-TB-AG CS6.1-60TB (Preliminary)	/	/	/	/	400-500	/	/
CS6.1-54TD (Preliminary)	/	/	/	/	300-400	/	/
CS6R-H-AG	/	/	/	400-550	/	400-500	/
CS6RA-H-AG	/	/	/	300-450	/	350-400	/

[1]: with 30 mm height frame;

[2]: with 35 mm height frame;

[3]: with 33 mm height frame and a hooked clamp, which is shown below.

[4]: only if the clamp length was extended to 60 mm or if a hooked clamp was used. Please consult Canadian Solar's technical service if you need to use clamps with different sizes.

*: test loads, please refer to section 6

◊: clamp overlap length should be at least 80 mm.

Hooked clamp diagram

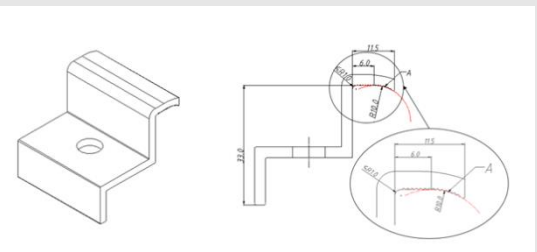

6.2.2 Clamp mounting on short side of frame and rails perpendicular to the long side frame.

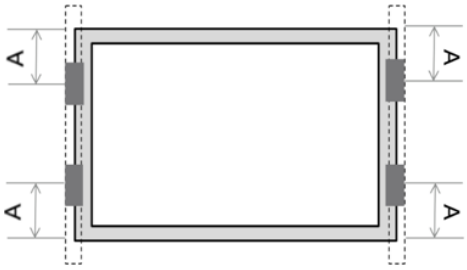

Module Types	A Range (mm)		
	0-200	60-250	200-250
	Max Mechanical Load (Pa)*		
CS6L-MS/ CS6W-MS (F45 [1] Frame)/CS6W-T CS6R-MS/CS6R-T CS6RA-MS/CS6RA-T CS6RB-MS/CS6RB-T CS6R-H-AG/CS6RA-H-AG	/	+1800/-1800◊	/
CS6R-MS-HL/CS6R-MB-HL	+2400/-2400	/	+2600/-2400
CS6W-MB-AG (F42 [2] Frame)	+1000/-1000	/	/

◊: clamp overlap length should be at least 80 mm;
[1]: with 30 mm height frame;
[2]: with 35 mm height frame;
*: test loads, please refer to section 6

6.2.3 Clamp mounting on long side of frame and rails parallel to the long side frame.

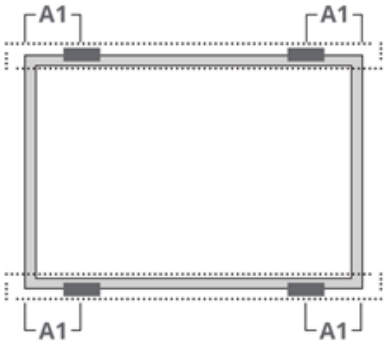

Module Types	Max Mechanical Load (Pa)*							
	+1800/ -1800	+2200/ -2200	+2800/ -2400	+3200/ -2400	+3600/ -2400	+4000/ -2400	+4000/ -3200	+5400/ -2400
	A1 Range (mm)							
CS6L-MS	/	100-500	/	/	300-500	/	/	/
CS6R-MS/CS6RB-MS	/	/	/	200-600	/	200-300	/	/
CS6RA-MS	/	/	/	/	/	200-400	/	/
CS6R-MS-HL/CS6R-MB-HL	/	/	/	/	/	100-600	/	450-550
CS6W-MS (F45 [1] Frame)/CS6W-T	60-250	/	400-500	/	/	/	/	/
CS6R-T	/	/	/	200-600	/	200-300	/	/
CS6W-MB-AG	0-250	/	/	/	/	/	400-500	/
CS7N-MB-AG (F43 [2] frame) / CS7L-MB-AG (F43 [2] frame) / CS6R-H-AG	/	/	/	/	400-500	/	/	/
CS7N-MB-AG (F46 [3] frame) / CS7L-MB-AG (F46 [3] frame)	/	/	400-500	/	/	/	/	/
CS6W-TB-AG	/	/	/	/	/	/	400-500	/
CS7N-TB-AG CS7L-TB-AG	/	/	400-500	/	/	/	/	/
CS6RA-H-AG	/		/	/	300-400	/	/	/

1: with 30 mm height frame; 2: with 35 mm height frame; 3: with 33 mm height frame; *: test loads, please refer to section 6

6.2.4 Four clamps on short side of frame and rails parallel to the long side frame.

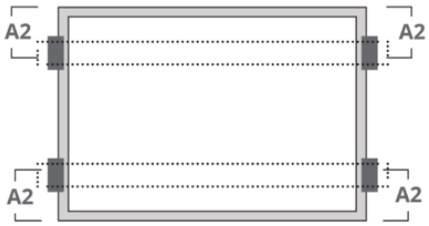

Module Types	A2 Range (mm)			
	0-200	60-250	200-250	250-300
	Max Mechanical Load (Pa)*			
CS6R-MS / CS6R-T CS6RA-MS / CS6RA-T CS6RB-MS / CS6RB-T CS6R-H-AG / CS6RA-H-AG	/	+2200/-1800◊	+2400/-1800◊	/
CS6R-MS-HL / CS6R-MB-HL	+2400/-2400	/	/	+5400/-2400

◊: clamp overlap length should be at least 80 mm;

*: test loads, please refer to section 6

6.2.5 Six clamps on long side of frame and rails perpendicular to the long side frame

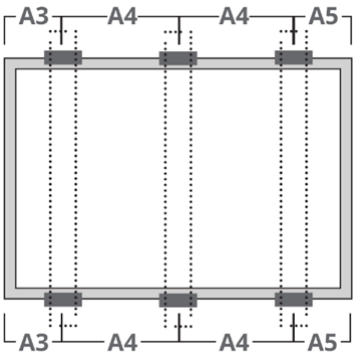

Module Types	Max Mechanical Load (Pa)*				
	+5400/-2400	+5400/-2800	+6000/-3600	+6000/-4000	+8100/-5000
	A3 & A5 Range (mm)				
CS6R-MS / CS6RA-MS / CS6RB-MS / CS6R-T / CS6R-H-AG	/	/	80-380	/	/
CS6R-MS-HL / CS6R-MB-HL	100-600	/	/	300-550	350-450
CS6W-MB-AG (F47 [1] & F47L[1] frame) CS6W-TB-AG	/	/	300-500	/	/
CS6W-MB-AG (F42 [2] frame)	/	350-450	/	/	/
CS6RA-H-AG	/	/	60-300	/	/

[1]: 30 mm height frame;

[2]: with 35 mm height frame;

*: test loads, please refer to section 6

6.2.6 Two clamps on the long side and two clamps on the short side of frame. Rails run perpendicular to the long side frame.

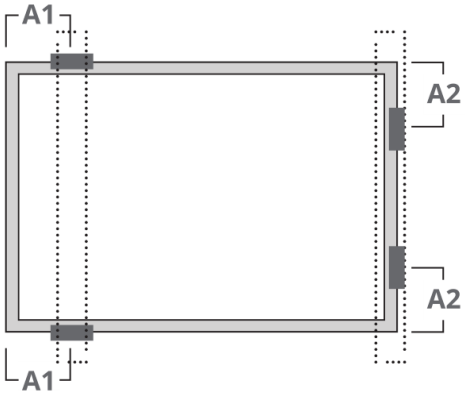

Module Types	Max Mechanical Load (Pa)*					
	+2400/-2000		+2400/-2200		+2400/-2400	
	A1 Range (mm)	A2 Range (mm)	A1 Range (mm)	A2 Range (mm)	A1 Range (mm)	A2 Range (mm)
CS6L-MS	/	/	/	/	500-600	200-250
CS6R-MS / CS6R-T / CS6R-H-AG	/	/	/	/	400-600	200-250
CS6RA-MS	/	/	/	/	300-450	200-250
CS6RB-MS	/	/	/	/	400-600	100-200
CS6R-MS-HL / CS6R-MB-HL	/	/	/	/	350-650	100-300
CS6W-MS (F45 [1] Frame) / CS6W-T	600-800	200-250	/	/	/	/
CS6W-MB-AG	/	/	600-700	200-250	/	/

[1]: with 30 mm height frame;

*: test loads, please refer to section 6

6.2.7 Four clamps mounting on the short side of frame.

Module Types	Max Mechanical Load (Pa)*		
	+1800/-1800	+2400/-2400	+2600/-2400
	A2 Range (mm)		
CS6L-MS CS6R-MS / CS6R-T CS6RA-MS / CS6RA-T CS6RB-MS / CS6RB-T CS6R-H-AG	60-250◊	/	/
CS6R-MS-HL / CS6R-MB-HL	/	0-200	200-250

◊: clamp overlap length should be at least 80 mm;

*: test loads, please refer to section 6

6.2.8 Four clamps mounting on short side of frame, and an additional support bar placed below the center of the module.

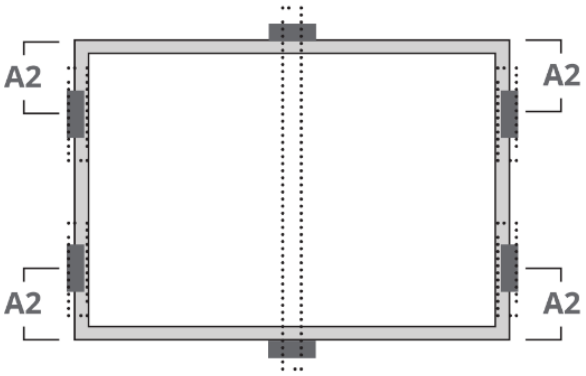

Module Types	Max Mechanical Load (Pa)*		
	+4000/-3000	+4000/-4000	+5400/-3000
	A2 Range (mm)		
CS6R-MS / CS6RA-MS / CS6RB-MS / CS6R-T	0-200	/	/
CS6R-MS-HL / CS6R-MB-HL	/	0-200	/
CS6R-H-AG	/	/	200-250

*: test loads, please refer to section 6

6.2.9 Rail-less clamping

The following methods are recommended only for single glass monofacial modules. Note that clamp overlap length of 40mm (or 1.50 in) when uplift load > 2400 Pa is allowed.

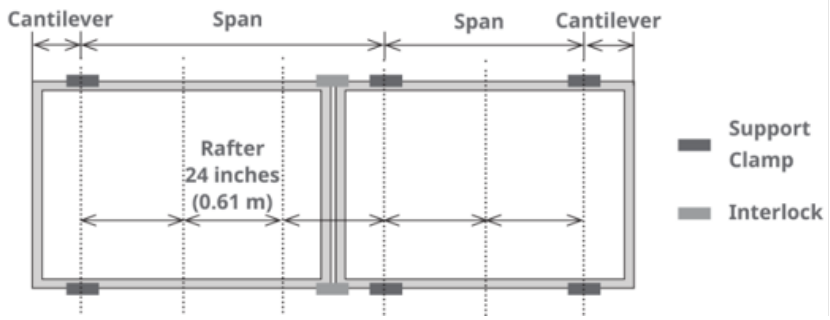

Landscape installation, clamping on long side frame

Modyle Type	Max Span	Max Cantilever length	Downforce*	Uplift*
CS6R-MS-HL / CS6R-MB-HL	72 inches (1.83 m)	24 inches (0.61 m)	2650 Pa	2400 Pa
	64 inches (1.63 m)	21.3 inches (0.54 m)	2800 Pa	2400 Pa
	48 inches (1.22 m)	16 inches (0.41 m)	3600 Pa	3600 Pa
	32 inches (0.81 m)	10.7 inches (0.27 m)	4000 Pa	3600 Pa

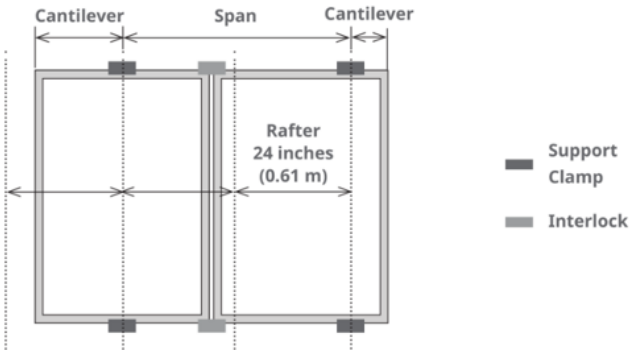

Portrait installation, clamping on short side frame

Modyle Type	Max Span	Max Cantilever length	Downforce*	Uplift*
CS6R-MS-HL/CS6R-MB-HL	48 inches (1.22 m)	16 inches (0.41 m)	1800 Pa	1800 Pa
	32 inches (0.81 m)	10.7 inches (0.27 m)	1800 Pa	1800 Pa
	24 inches (0.61 m)	8 inches (0.2 m)	2000 Pa	2000 Pa

*: test loads, please refer to section 6

6.3 INSERTION SYSTEM

- Insertion Method C shown below is recommended only for monofacial modules.
- The mechanical load test with these mounting methods were performed according to IEC 61215.
- Insertion methods can vary and depend on the mounting structures. The installer needs to follow the mounting guidelines recommended by the mounting system supplier. Each module must be securely maintained through all its length on two opposite sides. Install and tighten the insertion profiles to the support structure using the hardware and instructions provided by the mounting system manufacturer. The system designer and installer are solely responsible for load calculations and for the proper design of support structure.

- When installing insertion profiles, please take the following measures into account:
  1. Do not bend the module frame.
  2. Do not touch the front glass or cast shadows onto it.
  3. Do not damage the surface of the frame.
  4. Ensure that the insertion profiles overlap the module frame by at least 10 mm (0.39 in).
  5. Ensure that the module frame (C-shape) overlaps the insertion profiles by at least 15 mm (0.59 in).
  6. Ensure insertion profile thickness and tolerances suit module thickness.
- Canadian Solar warranty may be void in cases where improper insertion systems or unsuitable installation methods are used.

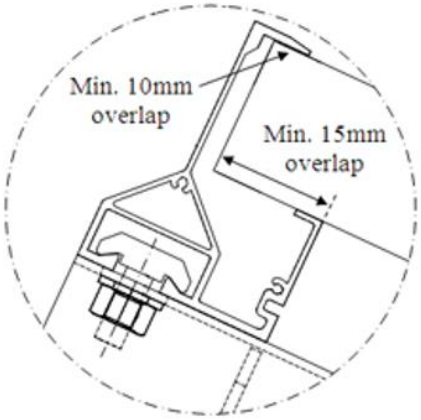

Insertion Method A	Insertion Method B	Insertion Method C
Two insertion profiles run parallel to long side frame.	Two insertion profiles run perpendicularly to long side frame.	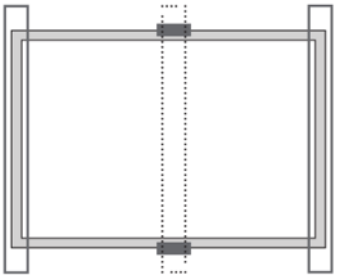 An additional support bar used with clamps

Installation Method / Module Types	Insertion Method A	Insertion Method B	Insertion Method C
CS6L-MS CS6R-H-AG / CS6RA-H-AG	+3600 Pa/-2400 Pa	+1800 Pa/-1800 Pa	/
CS6R-MS / CS6R-T CS6RA-MS / CS6RA-T CS6RB-MS / CS6RB-T	+4000 Pa/-2400 Pa	+1800 Pa/-1800 Pa	/
CS6R-MS-HL / CS6R-MB-HL	+5400 Pa/-2400 Pa	+2400 Pa/-2400 Pa	+5400 Pa/-2400 Pa
CS6W-MS (F35A[1] Frame)	+4000 Pa/-2400 Pa	+1800 Pa/-1800 Pa	+5400 Pa/-2400 Pa
CS6W-MS (F45[1] Frame)/ CS6W-T	+3600 Pa/-2400 Pa	+1800 Pa/-1800 Pa	+5400 Pa/-2400 Pa
CS6W-MB-AG (F47[1] & F47L[1] Frame)	+3600 Pa/-2400 Pa*	/	/

[1]: with 30 mm height frame;

[2]: with 35mm height frame.

The loads in the table are test loads, please refer to section 6

*: Just for CWF 0% overhang- insertion profile completely wraps the frame without cantilever. Rail distance must be ≥ 50%

frame from the short end of one side of the module.

6.4 MOUNTING METHOD：SINGLE-AXIS TRACKER

- The following mounting methods are only recommended for double glass modules.
- The bolts and clamps used in this section should follow the requirements described in chapter 6.0.
- Under any conditions the junction box should not come in contact with the subjacent racking structure except for the torque tube under high loading. For any single axis tracker installation configured with one module in portrait rows, bearing houses cannot be located under the module junction boxes.
- If any racking structures, especially bearing house, must be located under the modules, any racking structure shall not be higher than frame C side.

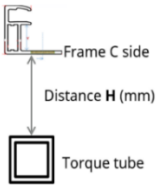

- If your tracker design cannot meet the above distance requirement, please contact Canadian Solar technical support department in writing for advice.

Tracker 1P Bolting method

- Install and tighten the module clamps to the mounting rails using the torque stated by the mounting hardware manufacturer. M6 × 1 (1/4”) or M8 × 1.25 (5/16”) bolt and nut are used for this bolting method.
- The tightening torques should be 6~9 Nm (4.5~6.6 ft-lbs) M6 × 1 (1/4”) coarse thread bolts for 10 × 7 mounting hole, depending on bolt class. M8 × 1.25 (5/16”) for 14 × 9 mounting hole.

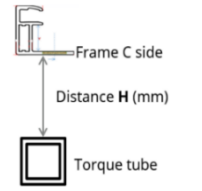

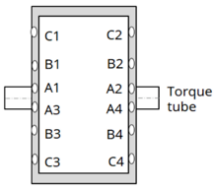

Module type	Mounting hole space (mm)	Fixed mounting hole location	Plain washer outer diameter (mm)	Distance H (mm)	Test load (Pa)
CS6W-MB-AG (F42 [2] frame)	A1-A3: 400 B1-B3: 790	A1, A2, A3, A4	16	65±5	+2000/-1800
		B1, B2, B3, B4	16	65±5	+2400/-2200
CS6W-MB-AG (F47 [1] & F47L[1] frame)	A1-A3: 400 B1-B3: 790	A1, A2, A3, A4	16	65±5	+2100/-2100
		B1, B2, B3, B4	16	65±5	+2800/-2400
CS6W-TB-AG	A1-A3: 400 B1-B3: 790	A1, A2, A3, A4	16	65±5	+2100/-2100
		B1, B2, B3, B4	16	65±5	+2800/-2400
CS7L-TB-AG	A1-A3: 400 B1-B3: 790	A1, A2, A3, A4	16	65±5	+2100/-1900
		B1, B2, B3, B4	16	65±5	+2500/-1900
CS7N-TB-AG		A1, A2, A3, A4	16	65±5	+2100/-1900
		B1, B2, B3, B4	16	65±5	+2300/-1900
CS7L-MB-AG	A1-A3: 400 B1-B3: 790	A1, A2, A3, A4	16	65±5	+2100/-1900
		B1, B2, B3, B4	16	65±5	+2500/-1900
CS7N-MB-AG		A1, A2, A3, A4	16	65±5	+2100/-1900
		B1, B2, B3, B4	16	65±5	+2300/-1900

[1]: with 30 mm height frame;

[2]: with 35 mm height frame

Tracker 1P Clamping method

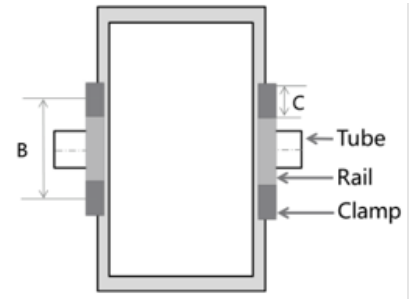

Overlap width between clamp and frame:

Frame top side ≥ 10 mm

Frame bottom side ≥ 15 mm

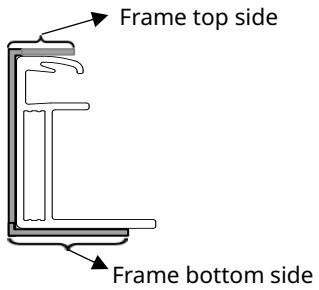

Module type	B Value (mm)	Clamp length C (mm)	Test load (Pa)
CS6W-MB-AG	≥400	≥40	+1800/-1800
CS7L-MB-AG	≥400	≥40	+1600/-1600
CS7N-MB-AG	≥400	≥40	+1500/-1500
CS6W-TB-AG	≥400	≥40	+1800/-1800
CS7L-TB-AG	≥400	≥40	+1600/-1600
CS7N-TB-AG	≥400	≥40	+1500/-1500

The height of the rail should be 50±10 mm.

Tracker 2P Bolting method

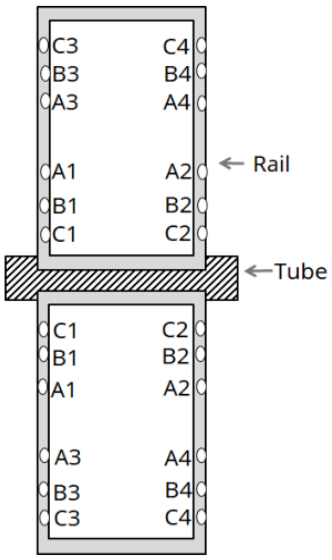

Module type	Mounting hole space (mm)	Mounting hole location	Plain washer outer diameter (mm)	Test load (Pa)
CS6W-MB-AG (F47[1] & F47L[1] Frame)	A1-A3: 400 B1-B3: 790	B1, B2, A3, A4	16	+1900/-1900
		B1, B2, B3, B4	16	+2600/-2200
CS6W-MB-AG (F42[2] Frame)	A1-A3: 400 B1-B3: 790	B1, B2, A3, A4	16	+1800/-1600
		B1, B2, B3, B4	16	+2200/-2000
CS7L-MB-AG CS7N-MB-AG CS7L-TB-AG CS7N-TB-AG	A1-A3: 400 B1-B3: 790	B1, B2, A3, A4	16	+1800/-1600
		B1, B2, B3, B4	16	+2000/-1800
CS6W-TB-AG	A1-A3: 400 B1-B3: 790	B1, B2, A3, A4	16	+1900/-1900
		B1, B2, B3, B4	16	+2600/-2200

[1]: with 30mm height frame;
[2]: with 35mm height frame

- The maximum allowable twist angle of the module is 0.5 degree.
- Please contact the tracker manufacturer and Canadian Solar's technical support department for details in

regard to specific projects.

- Please verify the approved loads in the table with the racking suppliers.
- The maximum deflection (ΔL shown in the below picture) is measured at the module corners under its own weight with a typical tracker mounting system. The maximum allowable deflection of the module is 25mm.

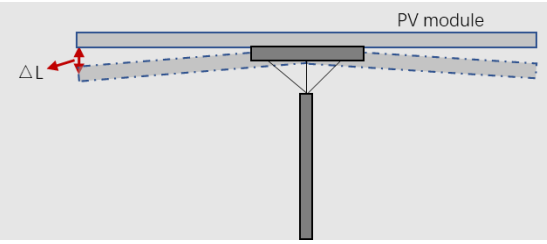

7 MAINTENANCE

- Do not make modifications to any component of the PV module (diode, junction box, connectors or others).
- Regular maintenance is required to keep modules clear of snow, bird droppings, seeds, pollen, leaves, branches, dirt spots, and dust.
- Modules with sufficient tilt (at least 15°), generally may not require cleaning (rain will have a self-cleaning effect). If the module has become soiled, wash with water and a non-abrasive cleaning implement (sponge) during the cool part of the day. Do not scrape or rub dry dirt away, as this may cause micro scratches.
- Snow should be removed using a soft brush.
- Periodically inspect the system to check the integrity of all wiring and supports.
- To protect against electric shock or injury, electrical or mechanical inspections and maintenance should be performed by qualified personnel only.

8 MODULE CLEANING GUIDELINES

This manual covers the requirements for the cleaning procedure of Canadian Solar photovoltaic modules. The purpose of these cleaning guidelines is to provide general information for cleaning Canadian Solar modules. System users and professional installers should read these guidelines carefully and strictly follow these instructions.

Failure to follow these instructions may result in death, injury or damage to the photovoltaic modules. Damages induced by inappropriate cleaning procedures will void Canadian Solar warranty.

SAFETY WARNING

- Cleaning activities create a risk of damaging the modules and array components, as well as increasing the potential electric shock hazard.
- Cracked or broken modules represent an electric shock hazard due to leakage currents, and the risk of shock is increased when modules are wet. Before cleaning, thoroughly inspect modules for cracks, damage, and loose connections.
- The voltage and current present in an array during daylight hours are sufficient to cause a lethal electrical shock.
- Ensure that the circuit is disconnected before starting the cleaning procedure, as contact with leakage of electrically active parts can result in injury.
- Ensure that the array has been disconnected to other active components (such as inverter or combiner boxes) before starting with the cleaning.
- Wear suitable protection (clothes, insulated gloves, etc.).
- Do not immerse the module, partially or totally, in water or any other cleaning solution.
- Rear side cleaning of the modules is not required, if cleaning the rear of a module is desired, care should be taken to ensure there is no damage caused to the module, especially the soft surface of the backsheet, by simply clearing the contaminant by hand or with a soft sponge.

HANDLING NOTICE

NOTICE

- Use a proper cleaning solution and suitable cleaning equipment.
- Do not use abrasive or electric cleaners on the module.
- Particular attention should be taken to avoid the module rear glass or frame coming in contact with

sharp objects, as scratches may directly affect product safety.

- Do not use abrasive cleaners, de-greasers or any unauthorized chemical substance (e.g. oil, lubricant, pesticide, Gasoline, white flower oil, active oil, mold temperature oil, machine oil (such as KV46), grease (such as Molykote EM-SOL, etc.), lubricating oil, anti-rust oil, stamping oil, butter，cooking oil, propyl alcohol, ethyl alcohol, essential oil, bone-setting water, Tianna water, mold release agent (such as Pelicoat S-6, etc.), glue and potting glue that can generate oxime gas (such as KE200, CX-200, Chemlok, etc.), TBP (plasticizer), cleaning agents, pesticide, paint strippers, adhesives, antirust agent, disincrustant, emulsifying agent, cutting oils and cosmetics, etc.) on the module.
- Do not use cleaning corrosive solutions containing hydrofluoric acid, alkali, acetone, or industrial alcohol. Only substances explicitly approved by Canadian Solar are allowed to be used for cleaning modules.
- For cleaning methods using rotating brush, please consult with Canadian Solar's technical support before using.
- Dirt must never be scraped or rubbed away when dry, as this will cause micro-scratches on the glass surface. The module damage due to improper dry cleaning method will void Canadian Solar’s warranty.
- Improper cleaning equipment design may cause localized heavy loads onto the module. Localized heavy loads may cause severe micro-cracks at cell level, which in turn may compromise module reliability and void Canadian Solar’s warranty. Please consult the Canadian Solar technical support department for information on the use of cleaning solutions and loading specifications. .

OPERATION PREPARATION

- Noticeable dirt must be rubbed away by gentle cleaning implement (soft cloth, sponge or brush with soft bristles).
- Ensure that brushes or agitating tools are not abrasive to glass, EPDM, silicone, aluminum, or steel.
- Avoid cleaning during the hottest hours of the day, in order to prevent thermal stress on the module.

CLEANING METHODS

Method A: Compressed Air

Canadian Solar recommends cleaning the soft dirt (like dust) on modules just with air pressure. This technique can be applied as long as the method is efficient enough considering the existing conditions.

Method B: Wet cleaning

If excessive soiling is present on the module surface, a non-conductive brush, sponge, or other mild agitating method may be used with caution.

- Ensure that any brushes or agitating tools are constructed with non-conductive materials to minimize risk of electric shock and that they are not abrasive to the glass or the aluminum frame.
- If grease is present, an environmentally friendly cleaning agent may be used with caution.
- Canadian Solar recommends the following to be used:
    - Water with low mineral content
    - Near neutral pH water
    - The maximum water pressure recommended is 4 MPa (40 bar)

ANNEX A: GUIDANCE ON MODULE TEMPERATURE FOR SEVERAL LOCATIONS

- The operational temperature of a PV module changes during the day and also from day to day throughout the year. The 98th-percentile temperature represents the temperature that is larger than 98% of all the temperatures, and consequently it is met or exceeded only 2% of the time.
- The 98th-percentile temperature is to be determined from measurements taken on hourly-basis, or even more frequently. For a standard year, the 98th-percentile temperature would be met or exceeded 175.2 hours.
- The operational module temperature is influenced by the environmental temperature but also by how the module is installed (e.g. mounting distance to roof, array size, array spacing and anti-nesting features), as it may allow a more efficient ventilation. The graphics below from IEC 63126 show this influence, the maps presented here are a general guidance and assumed conservative, please contact your local sales representative for further information.
- The operational temperature is influenced by the minimum distance between the module bottom and the surface of roof or wall. The distance is related to the climate. Figure A.2 shows climate area distribution of the Köppen climate types for the period from 1901 to 2010. In any climate regions except for BWh area, the minimum distance should be 10.2 cm (4.0 in). If you want to determine a specific distance on your project located in the BWh climate area, please contact Canadian Solar's technical service team. For more information about Köppen climate types, please refer to http://hanschen.org/koppen.

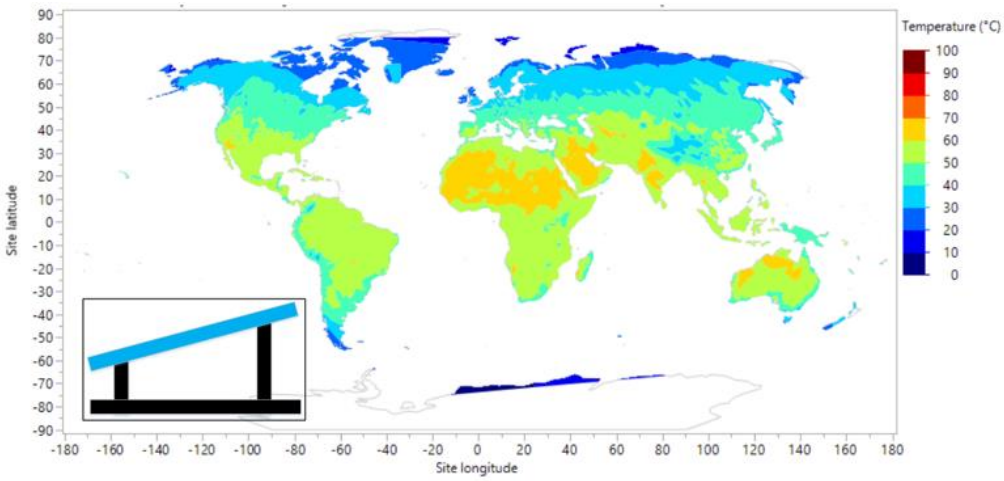

Figure A.1 – 98th-percentile temperature for an open-rack, or thermally unrestricted

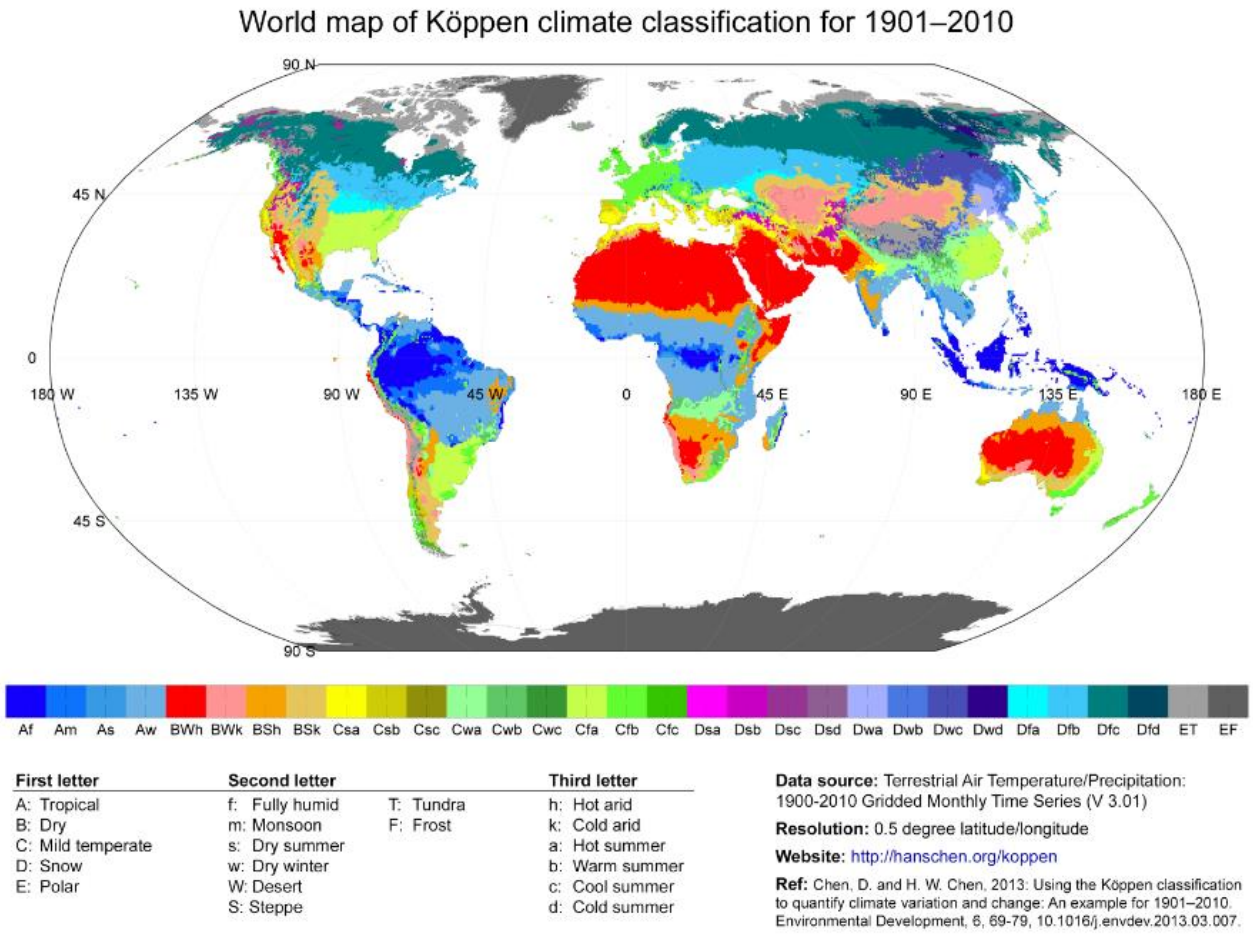

Figure A.2 Spatial distribution of the Köppen climate types for the period from 1901 to 2010

ANNEX B: INSTALLATIONS USING MODULE LEVEL POWER ELECTRONICS

- This section is applicable to CS6R-MB-HL and all Canadian Solar monofacial module types referred to in this installation manual.
- Module-level power electronics (MLPE) are devices that can be incorporated into a solar system to improve its performance in certain conditions (especially where shade is present) and to reduce shock hazard for emergency responders. MLPE devices can be supplied as a 'retro-fit' system made by third-party supplier.
- Module certification testing does not include MLPE devices.
- When installing MLPE devices with Canadian Solar modules, follow the instructions of the MLPE supplier and the specific requirements given below. Ensure electrical parameters and limitations of the MLPE devices and the Canadian Solar modules are suitable for one another.
- Failure to comply with these instructions will void the Canadian Solar warranty.
- When choosing to mount the MLPE device to the module frame, follow the MLPE supplier instructions to ensure optimal mounting of the MLPE device and prevent any slippage during operation.
- Canadian Solar recommends the MLPE device be installed close to a corner of the module frame.
- When choosing to mount the MLPE device to the mounting structure, please refer to the instructions provided by the MLPE supplier.
- Do not cover the module nameplate or junction boxes when installing the MLPE devices on the rear of the modules.
- Do not use frame mounting holes to install the MLPE device.
- Do not drill extra holes in the frame to install the MLPE device.
- The distance between the MLPE device and the module backsheet should be larger than 20mm.

INSTALLATION

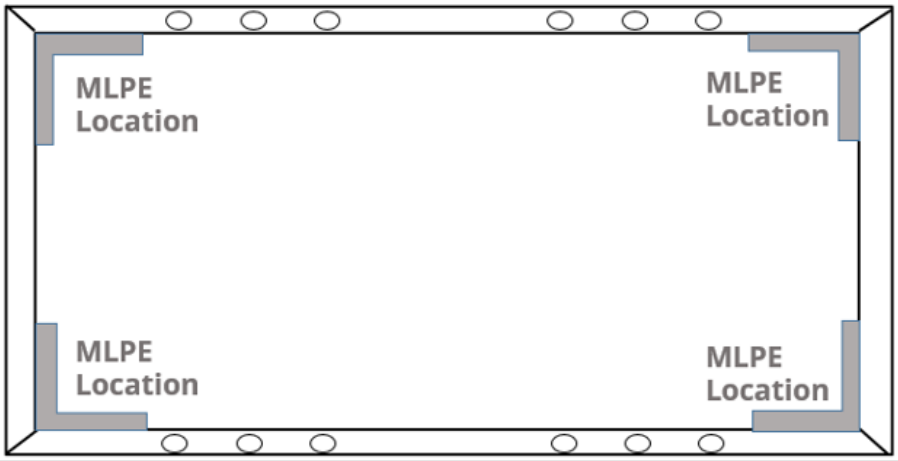

Figure B.1 - MLPE device installation zones

ANNEX C: COASTAL AREA ANTI-CORROSION INSTALLATION GUIDELINES

C.1.0 GENERAL INFORMATION

- According to the specific conditions stipulated in the Canadian Solar installation manual and general warranty statement, Canadian Solar PV modules are not allowed install in coastal areas. Coastal areas state that the places located within 100 m of the defined coastline.
- This annex has been created to facilitate approval for customer PV installations located within 20 m and 100 m of the coastline. It lays down general requirements to ensure that Canadian Solar PV modules are installed properly and reliably in coastal areas, which include but are not limited to relevant anti-corrosion principles for both the modules and associated mounting systems. This annex summarizes the key technical requirements stipulated by well-known international standards and explains how they apply to photovoltaic systems.
- Please read this annex carefully and strictly follow any relevant instructions prior to installing Canadian Solar modules in coastal areas. Failure to follow these instructions and other general anti-corrosion principles may result in corrosion damage to the photovoltaic modules and/or their racking systems, and will void the Canadian Solar limited product and performance warranty. For further inquiries, please contact our customer service department or our local representatives for more information.
- The reliability of photovoltaic modules strongly depends on their distance from the coastline. Different coastal land areas are defined according to how far away from the coastline they are; Canadian Solar generally classifies seashore PV installations according to four different groups:

Distance from the coastline (X: meters)	Requirements
X ≤ 20 m	Installations are strictly prohibited by Canadian Solar due to concerns over salt-mist corrosion.
20m < X ≤ 100 m	Installations must comprise Canadian Solar "special-anti-corrosion" modules. These installations must comply with the instructions listed under sections C.2.1/C.2.2/C.2.3/C3.0.
100m < X ≤ 500 m	Installation of Canadian Solar "special-anti-corrosion" modules is recommended. It is recommended to follow the instructions listed under sections C.2.1/C.2.2/C.2.3/C.3.0.
> 500 m	Please follow section 7.0

- Local conditions strongly influence the salt deposition rate, which is particularly, but not exclusively, dependent on specific regions and local wind patterns. Canadian Solar reserves the right to adapt the above definition to individual cases. Please contact your local representative to confirm which category your PV system falls under.
- The word "coastline" in this manual refers to the area where the land meets the sea during high tide.
- In this manual, "distance to the coastline" refers to the shortest distance between the photovoltaic module array and the coastline.
- Please consult the Canadian Solar technical support department or your local representative for more information on installing "special anti-corrosion" modules.

C.2.1 GENERAL ANTI-CORROSION METHODS

- Do not scratch or break the corrosion-resistant coating on the modules or mounting systems during installation.
- Do not change the structure of the module, e.g. by drilling holes into the module frame.
- Process specifications for the different components must comply with relevant international anti-corrosion standards.
- All general requirements listed in the Canadian Solar manual should be applied when installing “special-anti-corrosion” modules.

C.2.2 SPECIAL ANTI-CORROSION METHODS FOR MOUNTING

- Use mounting components that contain the same metals or metals with a similar electrochemical potential. The metal’s coating also should be taken into account. There may be a big difference between the electrochemical potentials of two different coating materials.
- If mounting components consist of two metals with a big difference in electrochemical potential, please add insulating washers (e.g. bi-metallic washers or insulation gaskets) to isolate the metals from each other.
- Copper/aluminum bi-metallic washers are commonly available to prevent electrochemical corrosion. These washers are made in a process called explosion welding.
- Concerning insulation gaskets, we recommend mica laminate, or other silicone or fluoride-based insulating materials.

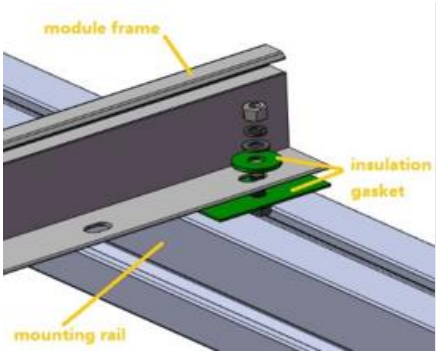

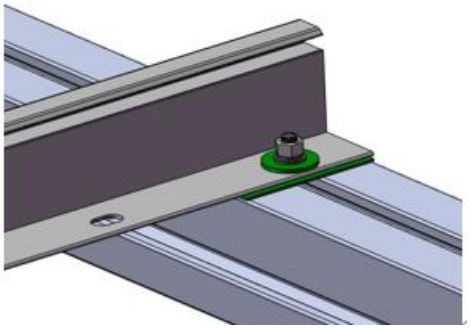

C.2.3 ANTI-CORROSION METHOS FOR GROUNDING

- We recommend two special anti-corrosion methods for protecting the system’s grounding devices. Please refer to the instructions in the table below:

Item	Method A	Method B
Coating components	Fluorocarbon varnish (one layer)	Layer 1 (metal side): epoxy zinc rich primer Layer 2 (middle layer): fluorocarbon finish paint Layer 3 (air side): fluorocarbon varnish
Coating thickness	40 μm	Layer 1 (metal side): 40 μm Layer 2 (middle layer): 40 μm Layer 3 (air side): 40 μm
Painting interval	/	Follow the supplier's general requirements when painting the three coating layers. Apply the middle layer 24 hours after painting layer 1. Paint the air side layer 6 hours later after painting the middle layer.
General requirements	Clean the grounding components and make sure that they are dry and clean. The coating must cover all the grounding components and junction areas of the module frame or mounting system. Please refer to the figure below for more details. The coating should be applied in a dry atmosphere (at least 24 hours) under the following conditions: relative humidity RH≤75%, ambient temperature T>5°C.	
Maintenance period	Three months	Five years

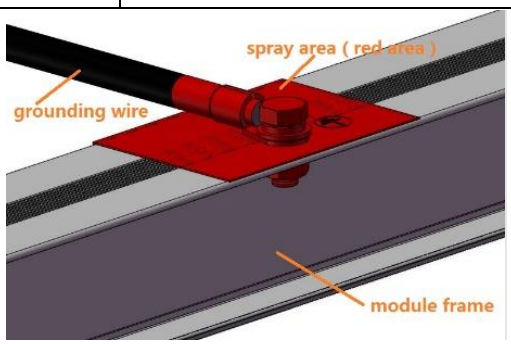

C.3.0 ANTI-CORROSION SUGGESTIONS FOR THE RACKING SYSTEM

- Suggestions for the racking system are provided below. The warranty does not cover the damage to the mounting system caused by corrosion if the mounting system is not provided by Canadian Solar. The requirements below apply to two main mounting systems: aluminum alloy-based racking for rooftops and galvanized steel-based structures for ground-mounted solar farms. To prevent salt-mist corrosion, Canadian Solar requires strict compliance with the following principles:
- Use approved corrosion-resistant materials (e.g. stainless steel SUS 316 or carbon steel with a hot-dip galvanized coating) for any racking or BOS components used in coastal areas.
- Process specifications for the different components must comply with relevant international anti-corrosion standards.
- Minimum coating thicknesses for hot-dip galvanized and anodizing oxide components must comply with the standard minimum requirements stipulated in JIS8641 and JIS8601.

Process	Minimum coating thickness	Standard
Hot-dip galvanizing (carbon steel)	HDZ55 (76um)	ISO 1461 JIS8641
Anodizing oxide (aluminum alloy)	AA20 (20um)	ISO 7599 JIS8601

- Use mounting components that contain the same metals or metals with a similar electrochemical potential. The metal's coating should also be taken into account. There may be a big difference between the electrochemical potentials of two different coating materials.

C.4.0 Precautions and General Safety

Before installing any modules, contact the appropriate authorities to obtain any relevant approvals and learn of any site, installation and inspection requirements.

- When applying coating materials, workers must follow applicable health and safety legislation and apply all respective preventive and proactive measures described within.

C.5.0 LIMITATION OF LIABILITY

- Canadian Solar shall not be held responsible for damages of any kind, including but not limited to, bodily harm, injury and damage to property as a result of handling modules, installing systems, or compliance or non-compliance with the instructions set forth in this manual.

AMENDED EDITIONS AND DATES

Rev 1.0 integrated version was first released in January, 2023

Rev 1.1 was released in March, 2023

Rev 1.2 was released in April, 2023

Rev 1.3 was released in June, 2023

Rev 1.4 was released in August, 2023

Rev 1.5 was released in September, 2023

Rev 1.6 was released in September, 2023

Rev 1.7 was released in October, 2023

CSI Solar Co., Ltd.

199 Lushan Road, SND, Suzhou, Jiangsu, China, 215129

www.csisolar.com